ARMALITE®, INC
OWNER'S MANUAL
FOR

M-15™ RIFLES AND CARBINES

⚠READ THIS MANUAL THOROUGHLY,
PARTICULARLY THE WARNINGS, BEFORE USING THIS FIREARM!
IT'S IMPORTANT!

Copyright ArmaLite®, Inc.
November 2008 Rev 15
P/N: MANUAL M15

ArmaLite® Inc.
P.O. Box 299
Geneseo, Illinois, USA 61254
1-800-336-0184
www.ArmaLite.com

1. READ THIS FIRST!

Throughout this manual you will find WARNINGS and/or CAUTIONS printed in bold print. All WARNINGS and CAUTIONS should be read carefully and followed completely. WARNINGS discuss issues that could result in damage to your firearm, or injury or death to you or a bystander. CAUTIONS discuss issues that could result in damage or malfunction of your firearm.

⚠ WARNING: IT IS YOUR RESPONSIBILITY TO ASSURE THAT YOUR FIREARM IS HANDLED, FIRED, AND STORED SAFELY AND RESPONSIBLY AT ALL TIMES.

This manual provides instructions on the operation and maintenance of your ArmaLite® firearm. Read and understand it carefully before you try to use your firearm. Your safety, and that of those around you, depends on your knowledge of your firearm and on your knowledge of safety rules common to all firearms. Please study the common-sense safety rules noted in this manual. Your first responsibility as a gun owner is always safety!

Your second responsibility as a gun owner is security. Make sure that your firearm remains in responsible hands…YOURS! Don't become an unwitting partner in a crime or tragedy: make sure your firearm is properly secured. Lock it in a secure storage container or, if none is available, remove the bolt and bolt carrier assembly and store it separately. If you have more than one similar firearm, make sure that you specifically identify the removed assembly with its original firearm because the assemblies may not be interchangeable.

It is also your responsibility to assure that you comply with all federal, state, and local laws with regard to the purchase, ownership, use, and storage of your firearm.

This manual may serve several models of ArmaLite® firearms. If so, instructions which refer to specific models will be clearly marked.

NOTICE

ArmaLite® has no control over the use of your firearm, and shall not be responsible for injury, death, or damage to property resulting from either intentional or accidental discharge of this firearm. In addition, ArmaLite® shall not be responsible for proper function of the firearm when it is used for purposes or subjected to treatment for which it was not intended. ArmaLite® will not honor claims which may result from careless or improper handling, unauthorized adjustments or parts replacement, corrosion, neglect, use of the wrong type or caliber of ammunition, or the use of ammunition other than original, high quality commercially manufactured ammunition in good condition or any combination thereof.

2. SAFETY FIRST! IT'S YOUR RESPONSIBILITY!

*** Treat every gun as if it is loaded …AT ALL TIMES!**
*** Always keep the muzzle pointed in a safe direction.**
*** Never point your firearm at anything that you do not intend to shoot.**
*** Keep your finger off the trigger and out of the trigger guard until you are aiming at your target and ready to shoot.**
*** Always keep the safety in the "SAFE" position, especially when the firearm is loaded and cocked, until you are ready to fire.**
*** Always keep and carry your firearm with an empty chamber until you intend to shoot, so that your firearm cannot be fired unintentionally. Firearms should be unloaded when not actually in use.**
*** Be sure of your target and backstop before you shoot. Ask yourself what your bullet will hit if it misses or goes through the target.**
*** Never shoot at hard, flat surfaces or water…bullets can ricochet.**
*** Always wear hearing and eye protection when shooting.**
*** Discharging firearms in poorly ventilated areas, cleaning firearms, or handling ammunition may result in exposure to lead, a substance known to be associated with birth defects, reproductive harm, and other serious injury. Have adequate ventilation at all times and wash hands after handling.**
*** Be sure that your barrel is clear of obstructions, including excessive oil, grease, cleaning patches, etc before shooting.**
*** Use only clean, high quality factory loaded ammunition in good condition. ArmaLite® cannot condone the use of handloaded ammunition. Any such use voids the ArmaLite® warranty.**
*** Do not alter or modify your firearm.**
*** Do not try to change your firearm's trigger pull, because alterations of trigger pull can affect sear engagement and might cause accidental firing.**
*** Store firearms and ammunition separately, and beyond children's reach.**

IN CASE OF MALFUNCTION, STOP! REVIEW THIS MANUAL TO IDENTIFY AND RESOLVE THE PROBLEM. IF YOU CANNOT RESOLVE IT, CONTACT ARMALITE®.

KEEP THIS MANUAL WITH YOUR RIFLE. IF YOU SELL THE RIFLE, GIVE THIS MANUAL TO THE NEW OWNER.

3. TABLE OF CONTENTS

1. READ THIS FIRST!---------- 2

2. SAFETY FIRST! IT'S YOUR RESPONSIBILITY!---------- 3

3. TABLE OF CONTENTS---------- 4

4. SAFE STORAGE---------- 5

5. GENERAL INFORMATION---------- 5

6. EXPLODED DRAWINGS AND PARTS LISTS---------- 7

7. AMMUNITION---------- 15

8. INITIAL ASSEMBLY, INSPECTION, AND CLEANING---------- 16

9. LOADING AND FIRING---------- 18

10. CLEARING / UNLOADING THE WEAPON---------- 23

11. ZEROING THE SIGHTS---------- 25

12. DISASSEMBLY---------- 27

13. MAINTENANCE---------- 33

14. REASSEMBLY---------- 40

15. TROUBLESHOOTING---------- 45

16. WARRANTY, SERVICE, AND SUGGESTIONS---------- 48

4. SAFE STORAGE

⚠ WARNING: ALWAYS ASSURE THAT YOUR FIREARM IS COMPLETELY UNLOADED BEFORE STORING IT. ALWAYS TREAT YOUR FIREARM AS IF IT WERE LOADED. ALWAYS STORE YOUR FIREARM IN A SAFE LOCATION, SEPARATE FROM THE AMMUNITION.

Make certain that both the chamber and magazine of your rifle are unloaded before you store it. Store your rifle in a securely locked gun safe. If you do not have a safe, remove the bolt and bolt carrier assembly from your rifle, and store it separately from the rifle in a secure location. Store your ammunition separately from the rifle and from the bolt and bolt carrier assembly.

⚠ WARNING: IF YOU HAVE MORE THAN ONE SIMILAR FIREARM, MAKE SURE THAT YOU SPECIFICALLY IDENTIFY THE REMOVED ASSEMBLY WITH ITS ORIGINAL FIREARM BECAUSE THE ASSEMBLIES MAY NOT BE INTERCHANGEABLE.

5. GENERAL INFORMATION

Your firearm is a lightweight, gas operated, air cooled, magazine fed rifle produced for a high degree of accuracy, reliability, and durability. The firearm's construction features extensive use of aircraft-grade forgings, with no die-cast or extruded parts employed in the receivers. The patented bolt assembly provides higher strength than that found on similar designs.

⚠ WARNING: YOUR ARMALITE® FIREARM WAS DESIGNED TO FUNCTION PROPERLY WITH ITS ORIGINAL COMPONENTS. ALTERATIONS TO ITS ORIGINAL COMPONENTS OR REPLACEMENT OF THEM WITH AFTERMARKET (NON-ARMALITE®) COMPONENTS CAN CAUSE MALFUNCTIONS OR EVEN MAKE THE FIREARM UNSAFE. DO NOT ALTER ANY PART OR ADD / SUBSTITUTE PARTS NOT MANUFACTURED BY ARMALITE® INC.

5.1 THE NATIONAL MATCH TRIGGER

ArmaLite®'s National Match trigger is designed to aid accuracy by reducing the distraction of the long, heavy, irregular trigger pull of the standard trigger mechanism.

The National Match trigger is a two-stage trigger with distinct characteristics: a first stage, which is relatively light, and a second stage of heavier resistance. Microscopic variations in the surface of the parts may cause a feeling of grittiness in the first stage. This is normal on factory-made parts, and will not affect the release of the shot. A properly adjusted second stage will not be creepy, and is the key to a successful mechanism.

The ArmaLite®® two stage match trigger is based on that of M1/M14 rifle, and is not user adjustable. It is intentionally built with a barely detectable creep in the second stage. As the trigger breaks in with use (200 to 500 rounds) the creep tends to disappear. It is not possible to exactly predict the amount of break-in of a new trigger, so it is impossible to produce a fixed device that will always break in to produce a perfect trigger pull. If creep remains, a trained gunsmith using the same techniques used with the M1/M14 trigger system may adjust the trigger. ArmaLite®® technicians will adjust the triggers for a nominal fee. Instructions will be provided to licensed gunsmiths upon request. Match triggers require more attention and tuning than standard triggers.

ArmaLite®® absolutely cannot condone modification of the ArmaLite®® trigger mechanism by anyone other than a trained gunsmith. Any such modification may render the device unsafe and will void the factory warranty.

5.2 BARREL LIFE

Barrel life depends on how fast the rifle is fired and how accurate the shooter insists it must be. Shooting the rifle as fast as the trigger can be pulled can ruin the barrel in just a few hundred rounds. Firing at controlled rates will allow a standard grade M-15™ barrel to last for 10,000 to 15,000 rounds with accuracy acceptable for police use. Target shooters fire at very moderate rates, but their higher accuracy requirements may mean barrel replacement as early as 3,500 match rounds.

5.3 RECEIVER FIT

The M-15™ is not a custom firearm. ArmaLite® requires a close fit between the receivers, but normal forging and machining variations may result in play or slight side to side receiver mismatch. This is not a manufacturing defect and has no adverse effect on accuracy.

5.4 APPEARANCE

Almost all complaints concerning appearance come from customers who forget that the M-15™ is a Military Specification rifle, not a polished commercial or collectors-grade rifle. It is an industrial product, not a custom rifle, and bears finishes appropriate for its intended purposes. ArmaLite® rifles are all thoroughly test fired before shipping. New rifles will normally show evidence of this firing. If the receiver looks light or uneven in color, it's probably just dry. A light coat of oil on the metallic surfaces will improve its appearance.

The receivers and front sights are made of forgings because forgings provide exceptional strength. By its very nature, the forging process may leave small dents and dings on the outside of the forging. ArmaLite® inspects all forgings for excessive marks, but no forging is free of them. This is not a defect.

6. EXPLODED DRAWINGS AND PARTS LISTS

The drawings and associated parts lists in this section will give you visual references to parts discussed in the text. In the text, you will note part numbers in parentheses behind some part names. Those part numbers are the same as part numbers shown in the exploded drawings and part lists. For example, a part numbered “U-7” in the text would refer to the part numbered “7” in the Upper assembly exploded view.

M15 Upper Assembly

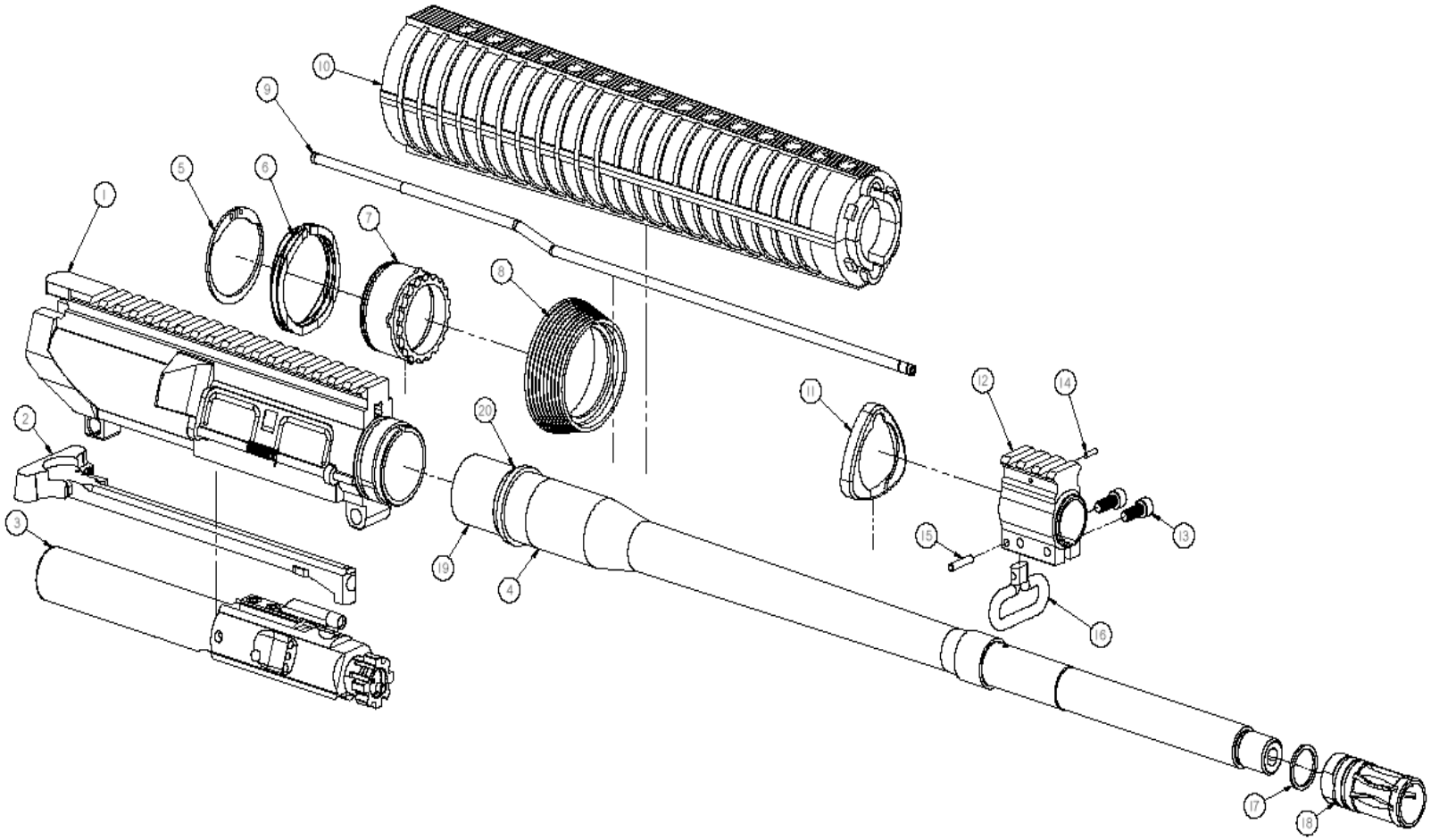

M15 Upper Assembly Parts List

1	M15-A4 Upper Receiver Assembly	EK0130A	12	Picatinny Gas Block (Clamp) Moly.	EA1151
*	M15-A2 Upper Receiver Assembly w/N.M. Sights	EK0112	*	"T" Picatinny SST Gas Block	EA1154
^	M15-A2 Upper Receiver, w/o Sights	EK0113	^	Front Sight Housing Pre-Ban Pin On w/Bayonet Lug	EU0240-1P
2	M15 Charging Handle Assembly	EU0010B	13	Picatinny Housing Clamp Screw, #10-32 x 1/2"	EA1152
3	.223 Bolt Carrier Group	EB0170	^	Picatinny Housing Clamp Screw, #10-32 x 1/2" SST	EA1152S
4	.223 Barrel Tube, 20" Rifle, Moly-CL	EPT003P	14	Gas Tube Retaining Pin, 5/64" x 5/16" Spring Pin	EU0160
^	.223 Barrel Tube, 16" Median, Moly-CL	EPC003P	^	Gas Tube Retaining Pin, 5/64" x 1/2" Spirol Pin	EA1152
*	.223 Barrel Tube, 20" Rifle, SST w/Threads	EPT006	15	Front Sling Swivel Rivet	EU0185
^	.223 Barrel Tube, 24" Rifle (T), SST	EPT005	^	Sling Swivel/Gas Block Pin, 1/8" x 5/8" Spirol Pin	EU0180
5	Slip Ring Retaining Ring	EU0320	16	Front Sling Swivel	EU0190
6	Slip Ring Spring	EU0310	17	Shim Washer (.223 Peel Washer)	EU0120
7	.223 Barrel Nut	EU0330	18	.223 A2 Flash Suppressor	EU0100
^	National Match Barrel Nut	ENM012	19	.223 Barrel Extension w/Feed Ramps	EU0551-1
*	M15-A4 (T) Barrel Nut	EU0072	20	Barrel Extension Index Pin	EU0332
8	Slip Ring (Black)	EU0300B		Upper Half Parts Not Shown	
9	.223 Rifle Gas Tube	EU0170	*	National Match Barrel Sleeve Lock Nut	ENM013
^	Carbine Gas Tube Median Length	EU0058	^	National Match Barrel Sleeve, Rifle	ENM014-1
*	National Match Rifle Gas Tube	EU0172	*	National Match Front Sight Post	ENM040
10	M15-A2 Handguards, Free Float, Green	EG0080	^	Front Sight Detent Spring	EU0250
*	M15-A2 Handguards, Free Float, Black	EU0069	*	Front Sight Detent	EU0231
^	Carbine Median Length Handguards, Black w/Liner	EU0059	^	Front Sights/Recoil Check Dowel Pins	EU0241P
*	Carbine Median Length Handguards, Green w/Liner	EG0060	*	Picatinny Gas Block Spacer/Shim Washer	EU0335
^	A2 Handguards OD, Green w/Liner	EG0040	^	Front Sight Set Screw	EU0824
*	M16-A2 Round Handguards	EU0070	*	5/64" Allen Wrench National Match	ENM128
^	M15-A4(T) Rifle Handguard, Black	EA5240	^	A2 Rear Sight Kit w/Battle Sight Aperture	EM2002
*	M15-A4(T) Rifle Handguard, Green	EA5250	*	Front Sight Post (Square)	EU0210
11	Handguard Cap (STD Triangle)	EU0333			

-PARTS MARKED WITH AN "^" ARE NOT SHOWN
-BARREL TUBES AND BARREL EXTENSIONS ARE SOLD AS ASSEMBLIES WITH INDEX PIN
-INDEX PIN IS ALSO SOLD SEPARATELY
-IF BOLT CARRIER ASSEMBLY OR BARREL IS REPLACED, HEADSPACE NEEDS TO BE CHECKED BY QUALIFIED GUNSMITH

M15 Lower Half Assembly

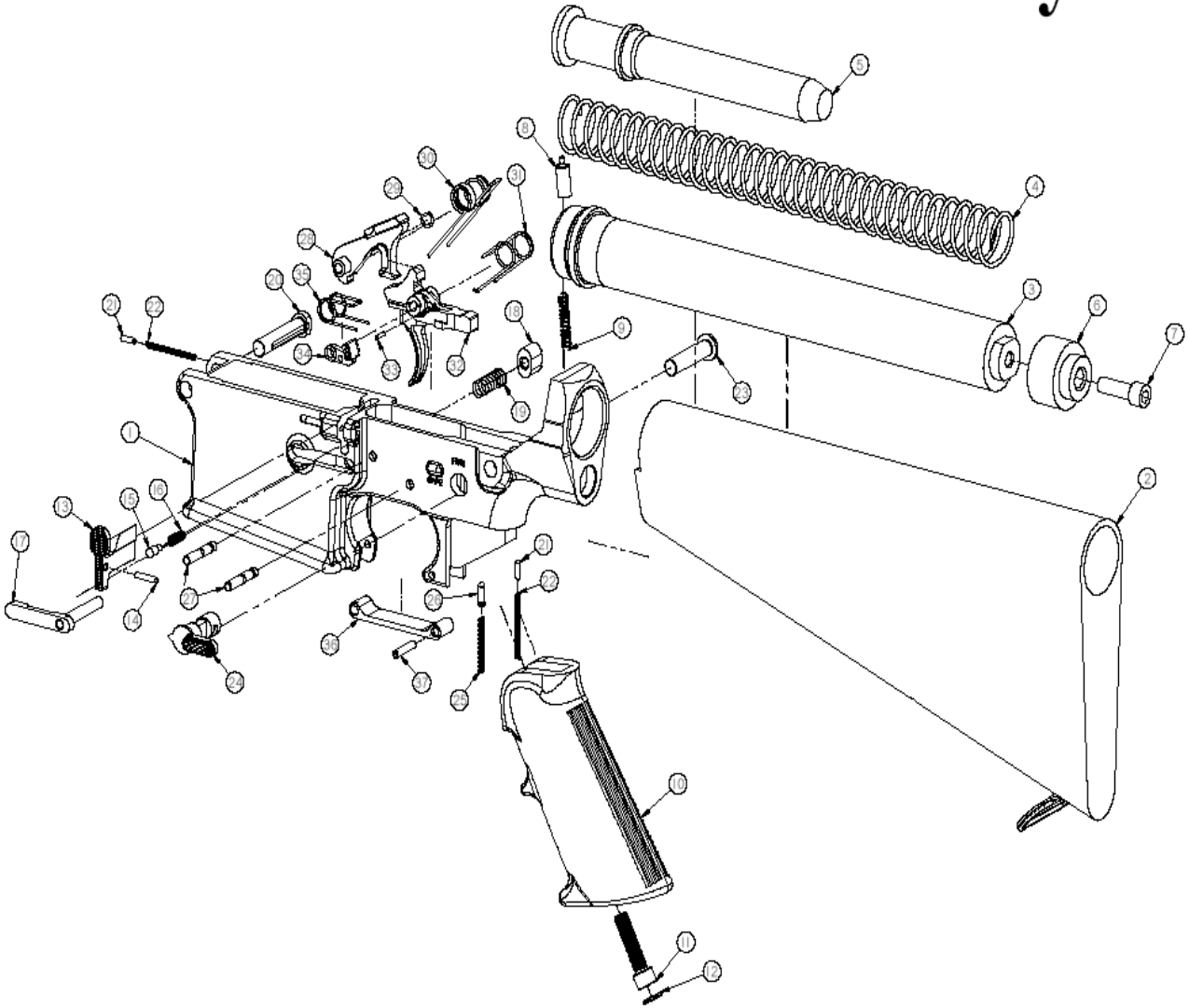

M15 Lower Half Assembly Parts List

1	M15 Lower Receiver	EA900G	16	Bolt Stop Spring	EL0250
2	M15 Buttstock Assembly (Black)	EL0110	17	Magazine Catch	EL0260
*	M15 Buttstock Assembly (Green)	EG0020	18	Magazine Catch Button	EL0270
*	M15 Collapsible Buttstock Assembly (Black)	15702301	19	Magazine Catch Spring	EL0280
*	M15 Collapsible Buttstock Assembly (Green)	15702306	20	M15 Pivot Pin	EL0170
3	Receiver Extension Tube	EL0370	21	Detent, Pivot/Takedown Pin	EL0150
*	Receiver Extension Tube (Carbine)	15207020	22	Detent Spring, Pivot/Takedown Pin	EL0140
4	M15 Operating Spring	EL0210	23	M15 Takedown Pin	EL0160
*	M15 Carbine Operating Spring	EC0040	24	Safety Selector	EL0290
5	M15 Buffer	EL0180	25	Ejector/Safety Spring	EB0110
*	M15 Carbine Buffer	EC0030R	26	Safety Detent	EL0060
6	Buttstock Spacer	EL0130	27	Hammer/Trigger Pin	EL0300
7	A2 Buttstock Screw	EL0090	28	Two Stage Tactical Hammer	10308000
8	Buffer Detent	EL0190	29	Clip, Hammer Pin Retaining, "D-Ring"	10308020
9	Buffer Detent Spring	EL0200	30	Hammer Torsion Spring	EL0320
10	Pistol Grip (Black)	EL0030	31	M15/AR10 Hammer/Trigger Spring	15303055
*	Pistol Grip (Green)	EG0050	32	Two Stage Trigger	10303040
11	Pistol Grip Screw	EL0010	33	Coiled Spring Pin 1/16" x 1/4"	10306000
12	Pistol Grip Washer	EL0020	34	Two Stage Disconnector	10307000
13	M15 Bolt Stop	EL0230	35	M15/AR10 Disconnector Spring	10806100
14	Bolt Stop Pin, 3/32" x 1/2"	EL0220	36	Trigger Guard Assembly	EL0380
15	Bolt Stop Plunger	EL0240	37	Trigger Guard Pin, 1/8" x 5/8"	EL0430

-PARTS MARKED WITH AN "*" ARE NOT SHOWN
-PARTS 28, 32, AND 34 ARE SOLD AS MATED ASSEMBLY ONLY

M15 BOLT CARRIER ASSEMBLY

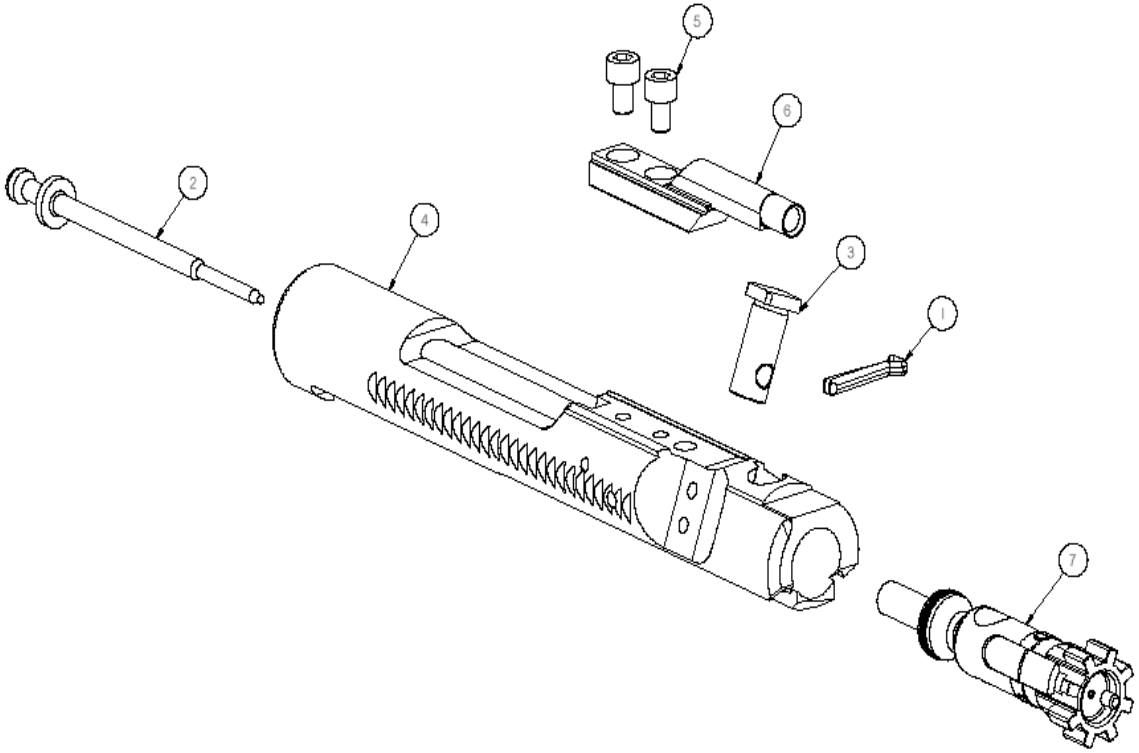

M15 BOLT CARRIER PARTS LIST

1	Firing Pin Retaining Pin	EB0010
2	Firing Pin	EB0020
3	Cam Pin	EB0030
4	Bolt Carrier	EB0160
5	Key Screws	EB0140
6	Bolt Carrier Key .223/.308	EB0150
7	Bolt Assembly	EB0040

-PARTS 4, 5, AND 6 ARE NOT SOLD AS SEPARATE PIECES BUT ARE SOLD TOGETHER AS ARMALITE PART NUMBER EB0167
-PART 7 IS FACTORY REPLACEABLE ONLY SO PROPER HEADSPACE CAN BE OBTAINED

M15 BOLT ASSEMBLY

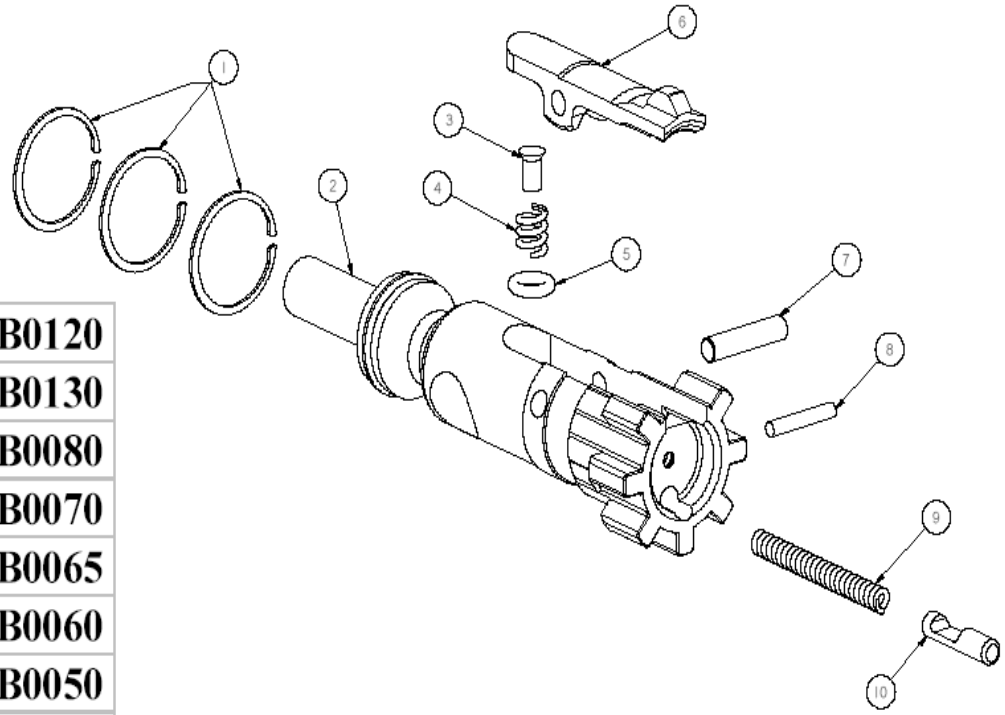

1	Gas Rings	EB0120
2	Bolt	EB0130
3	Extractor Spring Plunger	EB0080
4	Extractor Spring	EB0070
5	O-Ring	EB0065
6	Extractor	EB0060
7	Extractor Pin	EB0050
8	Ejector Pin	EB0090
9	Ejector Spring	EB0110
10	Ejector	EB0100

-PART NUMBER 2 IS NOT SOLD AS A SEPARATE ITEM

7. AMMUNITION

Nomenclature of cartridges can be confusing. It is vital that you understand cartridge nomenclature and only fire cartridges for which this firearm was designed.

⚠ WARNING: USE OF INCORRECT AMMUNITION CAN CAUSE WEAPON DAMAGE, PERSONAL INJURY, OR DEATH. MAKE ABSOLUTELY CERTAIN THAT YOU ARE USING CARTRIDGES DESIGNED FOR YOUR FIREARM. DO NOT FIRE OLD, CORRODED, DEFORMED, OR HANDLOADED AMMUNITION. IF YOU HAVE ANY QUESTIONS, CONTACT ARMALITE® BEFORE FIRING.

ArmaLite® chambers its M-15™ family of firearms for a number of different cartridges. In order to assure that you are using the correct cartridges for your firearm, you must look on the firearm itself. The caliber is marked on the barrel and/or upper receiver. If you have any questions regarding ammunition compatibility, CONTACT ARMALITE® BEFORE FIRING THE RIFLE!!!!!!!

If your M-15™ Series firearm is chambered for 5.56 cartridges, it will fire all standardized U.S. military 5.56mm cartridges and all factory loaded cartridges in .223 Remington caliber. Do not attempt to fire any other cartridges in this firearm. Standard M-15™s will provide an optimum combination of accuracy and reliability with projectile weights between 50 and 69 grains. M-15™T, M-15™TN, and M-15™A4NM rifles are designed for long range target use with 69 – 80 grain projectiles. However, they will function reliably with projectile weights between 50 and 80 grains.
The M-15™(T) has a specially lapped match grade barrel. It is superbly accurate when used with Black Hills molybdenum disulfide coated match ammunition, Federal .223M or other match quality ammunition. Naturally, accuracy is less impressive if lower quality ammunition is used.

If your M-15™ Series firearm is chambered for any cartridge other than 5.56mm, it will fire appropriate cartridges manufactured to SAAMI standards.

⚠ WARNING: DO NOT FIRE SABOTED AMMUNITION FROM YOUR RIFLE. THE SABOT COULD LODGE IN YOUR FLASH SUPPRESSOR CAUSING WEAPON DAMAGE AND POTENTIAL INJURY OR DEATH.

⚠ CAUTION: FIRING TRACER AND ARMOR PIERCING AMMUNITION REDUCES BARREL LIFE.

NOTE: Some types/brands of ammunition have unique characteristics (e.g. extremely light or heavy projectiles, particularly soft cartridge cases, propellant that burns unusually slowly or rapidly) that reduce its reliability in any semiautomatic firearm. ArmaLite™ recommends that you purchase and test a small quantity of any type of ammo in your weapon before you buy large quantities.

8. INITIAL ASSEMBLY, INSPECTION, AND CLEANING

8.1 INITIAL ASSEMBLY

Your M-15™ Series firearm is shipped to you completely assembled. However, if it has a collapsible buttstock, the buttstock may require adjustment in length to fit you.

ADJUSTING THE COLLAPSIBLE BUTTSTOCK

To extend the collapsible buttstock, depress lever and pull the stock out until it locks into position. To collapse the buttstock depress the lever again and push forward until it locks into position.

REMOVABLE SIGHTS OR SCOPE MOUNT:
To install removable carrying handle, front sight, or scope mount, loosen the knobs to give maximum clearance to the bar. Slip the base over the receiver or gas block, and tighten down until firm. Reverse to remove.

⚠ **WARNING: IF YOU MOUNT A SCOPE TO YOUR RIFLE, MAKE CERTAIN THAT THE SCOPE IS MOUNTED FAR ENOUGH FORWARD SO THAT IT WILL NOT IMPACT YOUR FACE DURING RECOIL. CHECK THE DISTANCE BETWEEN THE SCOPE AND YOUR FACE WHEN YOU ARE IN THE FIRING POSITION. BEAR IN MIND THAT YOU EYE WIL BE CLOSER TO THE SCOPE WHEN SHOOTING FROM PRONE OR FROM THE BENCH THAN WHEN SHOOTING OFF-HAND. WHEN IN DOUBT, INCREASE THE EYE RELIEF.**

8.2 INITIAL INSPECTION

⚠ WARNING: READ THIS MANUAL COMPLETELY AS YOU INSPECT YOUR NEW ARMALITE® FIREARM. MAKE CERTAIN THAT YOU UNDERSTAND HOW TO ASSEMBLE, OPERATE, DISASSEMBLE, MAINTAIN, AND STORE YOUR FIREARM SAFELY BEFORE YOU USE IT.

Any time you disassemble and reassemble a firearm, you should conduct a functional check of it. Check your firearm's function as described in the Reassembly section of this manual.

8.3 INITIAL CLEANING

Merely clean the bore of your firearm and lubricate the firearm as described in the Maintenance section below. ArmaLite® firearms are made more tightly than other rifles of similar design. A break-in period of 200 rounds allows machined or phosphate-coated surfaces to smooth out the rifle's action. Lubricate the rifle well before firing.

⚠ WARNING: TO ASSURE ITS PROTECTION FROM CORROSION, YOUR ARMALITE® FIREARM HAS BEEN SHIPPED WITH PRESERVATIVE OIL IN THE BORE. FIRING THE WEAPON WITH PRESERVATIVE IN THE BORE CAN INCREASE PRESSURES, WITH POSSIBLE WEAPON DAMAGE OR PERSONAL INJURY OR DEATH. CLEAN AND DRY THE BORE BEFORE FIRING YOUR ARMALITE® FIREARM.

8.4 BREAKING IN MATCH BARRELS

ArmaLite® has spoken with several barrel manufacturers. NONE of them recommend breaking in barrels using abrasives. For optimum accuracy and barrel life, ArmaLite® recommends the following break-in procedure:

1. Fire 9 single shots. After each shot, push a cotton patch wet with solvent through the bore. Then wet a bronze brush with solvent and stroke the barrel five to ten round trips. Follow with another wet patch and then a dry patch or two. (We do NOT recommend nylon or stainless steel brushes.) After you finish, wash the solvent off your brush so that the brush won't deteriorate.

2. From 10 to 30 shots, clean as above after each five shots. Initial break-in should now be complete.

For subsequent, normal cleaning, it is suggested that you clean after each range session. It is often suggested that the barrel be brushed one stroke for each shot fired.

9. LOADING AND FIRING

⚠ WARNING: ALWAYS KEEP THE SAFETY IN THE "SAFE" POSITION UNTIL YOU ARE READY TO FIRE THE WEAPON. REMEMBER THAT THE SAFETY IS SIMPLY A MECHANICAL DEVICE, AND AS SUCH, COULD POSSIBLY FAIL. NEVER DEPEND ON ANY SAFETY TO JUSTIFY UNSAFE GUN HANDLING. ALWAYS KEEP THE CHAMBER EMPTY AND THE WEAPON POINTED IN A SAFE DIRECTION EVEN WHEN THE SAFETY IS ON.

⚠ WARNING: INJURY, DEATH, OR FIREARM DAMAGE CAN RESULT FROM FIRING A WEAPON WITH AN OBSTRUCTION IN THE BORE. BEFORE YOU FIRE, MAKE SURE THAT THE BORE IS NOT OBSTRUCTED. NEVER ATTEMPT TO SHOOT OUT A BORE OBSTRUCTION.

⚠ WARNING: ALWAYS WEAR EYE AND EAR PROTECTION. MAKE SURE THAT NEARBY BYSTANDERS ALSO WEAR EYE AND EAR PROTECTION.

⚠ WARNING: HANDLING OF CARTRIDGES AND FIRING WEAPONS MAY EXPOSE YOU TO LEAD. ALWAYS ASSURE THAT THERE IS ADEQUATE VENTILATION. ALWAYS WASH YOUR HANDS AFTER HANDLING AMMUNITION OR FIRING YOUR WEAPON.

⚠ WARNING: THIS WEAPON WILL FIRE WITHOUT A MAGAZINE IN IT. ALWAYS ASSURE THAT THE CHAMBER IS EMPTY. THE WEAPON SHOULD NOT BE CONSIDERED TO BE SAFE UNLESS THE MAGAZINE IS REMOVED, THE SAFETY IS ON, AND THE BOLT IS OPEN, AND THE CHAMBER IS EMPTY.

⚠ WARNING: THE FIRED CARTRIDGE CASE IS HOT WHEN IT IS EJECTED FROM THE FIREARM. DO NOT ALLOW IT TO BURN YOU, OR TO DISTRACT YOU FROM SAFE HANDLING OF THE FIREARM.

⚠ WARNING: IF THE WEAPON FAILS TO FIRE WHEN THE TRIGGER IS PULLED:
1. KEEP THE WEAPON POINTED AT THE TARGET!!!
2. WAIT 15 SECONDS TO ALLOW A POSSIBLE "HANGFIRE" TO GO OFF. THEN,
3. CHECK TO SEE IF THE SAFETY IS ENGAGED BY MISTAKE. IF SO, PUSH THE SAFETY TO THE "FIRE" POSITION AND FIRE.
4. IF THE WEAPON STILL DOESN'T FIRE, BE CATIOUS AND ASSUME THAT THE CARTRIDGE WILL DISCHARGE WHEN THE BOLT IS OPENED.

5. OPEN THE BOLT QUICKLY AND UNLOAD THE WEAPON.
6. EXAMINE THE WEAPON AND CARTRIDGE CAREFULLY TO IDENTIFY THE CAUSE OF THE MALFUNCTION.

⚠ WARNING: RAPID FIRING OF THE WEAPON MAY CAUSE SOME COMPONENTS TO BECOME HOT ENOUGH TO CAUSE INJURY. EXTENDED SESSIONS OF VERY RAPID FIRING MAY CAUSE A CARTRIDGE LEFT IN THE CHAMBER TO "COOKOFF", FIRING ITSELF WITHOUT YOU PULLING THE TRIGGER. ALWAYS UNLOAD THE WEAPON IMMEDIATELY AFTER YOU FINISH FIRING.
To prevent cookoffs and maximize barrel life, the rate of fire should not exceed the following:

2 minutes --- 40 rounds per minute
10 minutes --- 30 rounds per minute
20 minutes --- 20 rounds per minute
30 minutes or more --- 13 rounds per minute

9.1 LOADING THE MAGAZINE

Set the cartridge on the follower, between the feed lips and pointing the same direction as the "bullet" on the follower, and press it straight down until it's held by the lips of the magazine.

⚠ CAUTION: CURRENTLY ARMALITE® SELLS 5.56MM MAGAZINES THAT ARE DESIGNED FOR CAPACITIES OF 5, 10, 20, AND 30 ROUNDS. DO NOT EXCEED THESE CAPACITIES. DUE TO VARIATIONS IN DIAMETERS OF VARIOUS BRANDS OF CARTRIDGES, IT MAY BE POSSIBLE TO FORCE AN ADDITIONAL CARTRIDGE INTO A MAGAZINE. DOING SO WILL DAMAGE YOUR MAGAZINE AND LEAD TO ELEVATED MALFUNCTION RATES.

Take it easy with your magazines. Keep them clean, dry, and don't pound them into the rifle. It looks great in the movies but is wrong. Insert them smoothly then check to assure they're locked in the rifle by tugging downward.

1. Pull the charging handle (U-2) rearward, lock the bolt carrier assembly (U-3), and release the charging handle. Place the safety (L-24) on SAFE. Check to see that the chamber is clear and the bore is not blocked.

2. Push upward on the magazine until the magazine catch (L-17) engages and holds the magazine. Pull down on the magazine slightly to make sure that it is locked in place.

9.2 CHAMBERING AND FIRING A ROUND, STARTING WITH THE BOLT OPEN AND MAGAZINE INSERTED

1. Depress the upper portion of the bolt stop (L-13) to release the bolt.

2. With the rifle pointed in a safe direction, move the safety (L-24) to “FIRE”.

3. Squeeze the trigger (L-32) and fire.

9.3 CHAMBERING AND FIRING A ROUND, STARTING WITH THE BOLT CLOSED AND MAGAZINE INSERTED

1. Pull the charging handle (U-2) all the way back.

2. Release the charging handle. If the bolt carrier (U-3) doesn't fully close, tap the forward assist to close it.

If it still won't close, clear the rifle and correct the problem.

3. Never "ride" the charging handle. Let it slide forward at full speed.

4. Set the safety to “FIRE”, grip the rifle firmly, and squeeze the trigger.

⚠ **WARNING: GRIPPING THE RIFLE LOOSELY WHEN FIRING CAN CAUSE THE SHOOTER TO FIRE TWO SHOTS (THE SECOND AS THE TRIGGER STRIKES THE SHOOTER’S TRIGGER FINGER DURING COUNTER-RECOIL.) THIS IS A SHOOTER ERROR, NOT A RIFLE MALFUNCTION.**

⚠ **CAUTION: DO NOT REST THE RIFLE ON ITS MAGAZINE WHEN YOU ARE LOADING OR FIRING IT. DOING SO CAN FORCE THE MAGAZINE UP INTO THE RIFLE, REDUCING THE RELIABILITY OF FEEDING CARTRIDGES.**

10. CLEARING / UNLOADING THE FIREARM

⚠ WARNING: ALWAYS ASSUME ALL FIREARMS ARE LOADED. ANYTIME YOU HANDLE A FIREARM, YOU SHOULD IMMEDIATELY INSPECT IT TO ASSURE THAT IT IS COMPLETELY UNLOADED.

⚠ WARNING: IF YOU KNOW NOTHING ELSE ABOUT YOUR ARMALITE® FIREARM, YOU MUST KNOW HOW TO UNLOAD IT AND CLEAR IT TO MAKE IT SAFE.

Keep your rifle cleared when not in use.

1. **Place safety lever (L-24) on "SAFE".**

NOTE: If the rifle is not cocked, the lever cannot be pointed toward SAFE.

2. **Remove the magazine** by depressing the magazine catch button (L-18) and pulling the magazine down.

⚠ CAUTION: THE MAGAZINE WILL FALL FREE WHEN THE MAGAZINE CATCH IS PRESSED. DON'T ALLOW THE MAGAZINE TO FALL ONTO A HARD SURFACE. DOING SO MAY DAMAGE THE MAGAZINE.

3. **Extract the cartridge (if any) from the chamber**. To lock the bolt carrier assembly (U-3) open, pull the charging handle rearward, press the bottom of the bolt catch, and allow the bolt to move forward until the bolt stop retains it. Return the charging handle forward.

4. Look into the receiver and chamber to ensure that these areas contain no ammunition.

⚠ **WARNING: NEVER ASSUME THAT THE CHAMBER IS EMPTY UNTIL YOU HAVE VISUALLY EXAMINED IT AND SEE THAT IT IS EMPTY.**

5. Empty all remaining cartridges out of your magazines.

⚠ **WARNING: THE STEPS IN UNLOADING YOUR FIREARM MUST BE FOLLOWED IN THE EXACT ORDER GIVEN. THE MAGAZINE MUST BE REMOVED BEFORE THE CHAMBER IS INSPECTED. IF YOU CLEAR THE CHAMBER BEFORE REMOVING THE MAGAZINE, YOU MAY REMOVE ONE CARTRIDGE FROM THE CHAMBER AND THEN, UPON CLOSING THE BOLT, CHAMBER ANOTHER CARTRIDGE FROM THE MAGAZINE. THE FIREARM WILL STILL BE LOADED. REMEMBER THAT A CARTRIDGE IN THE CHAMBER CAN STILL BE FIRED EVEN AFTER THE MAGAZINE IS REMOVED.**

11. ZEROING THE SIGHTS

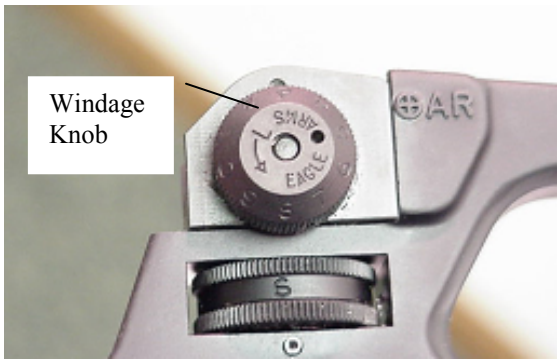

Because every shooter sees the sights differently, two shooters may have a different zero on the same rifle.

1. Rotate the elevation knob down (counter clockwise) until either the lowest digit on the elevation knob is aligned with index line above the knob and sight in at the shortest range to be fired (0 to 20 marked match rifle scale) or set the elevation knob to the distance to be fired, i.e. "2" for 200 yards.

2. Carefully aim and fire at the center of the target. Fire at least a three shot group, and locate the center of the group.

3. If your shot group is not in the center of the target, adjust the rear sight to move the next group. Turning the windage knob clockwise moves the impact RIGHT. Turning the windage knob counter-clockwise moves the impact LEFT. Turning the front sight clockwise (viewed from above) RAISES the impact. Turning the front sight counter-clockwise (viewed from above) LOWERS the impact. ArmaLite® recommends that you use a front sight adjustment tool to zero our front sight blades.

4. Repeat steps 2 and 3 until the group is centered on the target.

5. ArmaLite®® places numbers on both the windage and the elevation knob so that you can record your zero for future reference.

APPROXIMATE IMPACT SHIFT PER CLICK OF ADJUSTMENT:

Rear sight adjustments:
Windage; one click will move the shot group approximately ½ inch at 100 yards.
Elevation; one click will move the shot group approximately ½ inch at 100 yards.

NOTE: One windage click on the National Match sight moves the group ¼ inch at 100 yards.

Front sight adjustments:
The front sight adjustment is approximately 1 inch in elevation per click at 100 yards.
Moving the sight in the direction "up" will raise the shot group.

ArmaLite® makes a number of different sights for different uses:

DIFFERENCES IN SIGHTS

Front Sights:
A. Standard rifles are equipped with square front sight posts.
B. National Match rifles are equipped with narrow blade front sight posts. The wide face of the blade must face the shooter. The blade must be adjusted in full turns or the top of the sight will be backwards or slanted to one side.

Rear Sights:
A. Standard, GI grade. The smaller aperture generally has a curved surface facing the shooter.
B. Match sights generally have the apertures reversed at the factory so a flat surface is always presented to the eye to reduce reflection.
C. Elevation indexes are either marked 0 to 20 to count clicks (match sights) or with digits reflecting range in 100 yard increments (standard sights).

12. DISASSEMBLY

⚠ WARNING: ALWAYS UNLOAD YOUR FIREARM BEFORE CLEANING, LUBRICATION, DISASSEMBLY, OR REASSEMBLY.

⚠ WARNING: ALWAYS WEAR SAFETY GLASSES WHEN DISASSEMBLING, MAINTAINING, OR ASSEMBLING YOUR FIREARM. IN PARTICULAR, THE OPERATING SPRING IS UNDER HIGH COMPRESSION. IF IT SLIPS FROM YOUR GRASP, IT COULD CAUSE INJURY.

12.1 CLEAR THE RIFLE

IMPORTANT: Put the safety on "SAFE". Remove the magazine, THEN pull back the charging handle and check the chamber.

SLING
Remove the sling.

12.2 TWO PIECE HAND GUARDS – THE "BUDDY SYSTEM"

1. Stand the rifle on its buttstock with one hand gripping the buttstock (L-2) and the other gripping the lower end of the handguard (U-10).

2. While your buddy presses down on the slip ring (U-8), which is a two-hand job, pull the handguard free.

3. Repeat this procedure to remove the other handguard.

12.3 UPPER AND LOWER RECEIVERS

1. Push the takedown pin (K-23) as far as it will go.

⚠ **CAUTION: EXCESS FORCE CAN SEVERELY DAMAGE THE RECEIVER. TAKE IT EASY!**

2. Pivot the upper receiver (U-1) from the lower receiver (L-1).

3. Push the receiver pivot pin (L-20) as far as it will go. Take it easy!

4. Separate the upper and lower receivers.

12.4 CHARGING HANDLE AND BOLT CARRIER ASSEMBLY

1. Pull back the charging handle (U-2) and bolt carrier assembly (U-3).

2. Remove the bolt carrier assembly.

3. Pull the charging handle back and down to remove it.

4. Move the bolt assembly (BC-7) forward to the unlocked position and remove the firing pin retaining pin (BC-1). Do not open or close the split end of the firing pin retaining pin.

5. Push in on the bolt assembly (BC-7) to put it in the locked position.

6. Catch the firing pin (BC-2) as it drops out of the rear of the bolt carrier assembly.

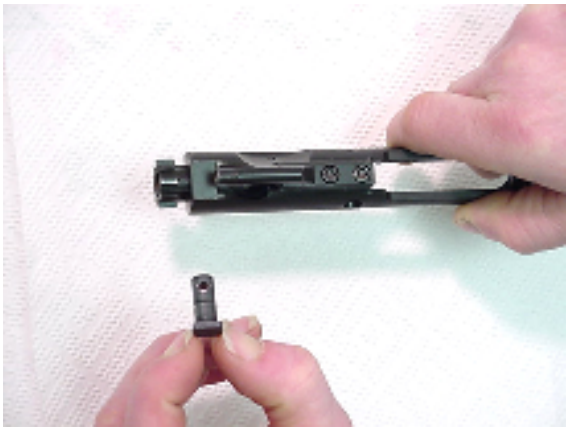

7.Give the bolt cam pin (BC-3) a ¼ turn and lift it out.

8. Remove the bolt assembly from the bolt carrier assembly.

9. Press the rear of the extractor (B-6) to check that the spring works.

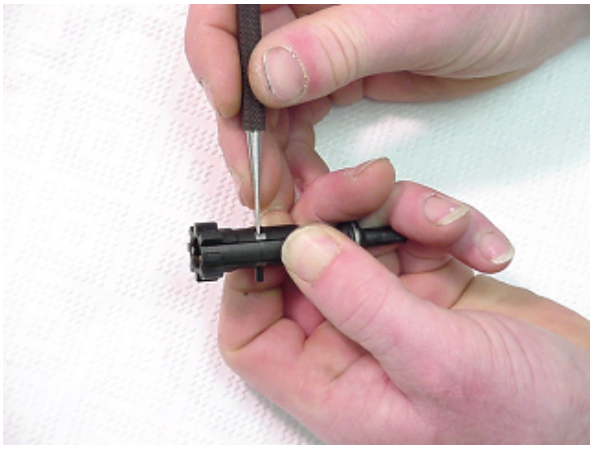

10. Use a punch or dummy round to remove the extractor pin (B-7).

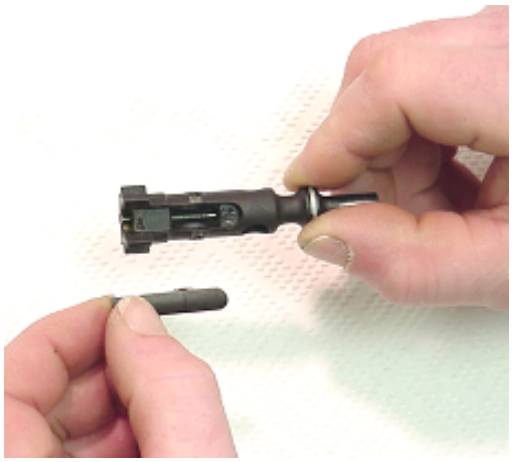

11. Remove the extractor and spring assembly. Do not remove the spring assembly (B-4), its plunger (B-3) or the O-ring (B-5) from the extractor (B-6).

12.5 LOWER RECEIVER ASSEMBLY

1. Cock the hammer (L-28) with your thumb. Push in the buffer (L-5) and depress the buffer detent (L-8) to release the buffer.

3. Remove the buffer (L-5) and the operating spring (L-4).

12.6 DISASSEMBLING THE MAGAZINE

Use the tip of a cartridge or another suitable tool to very slightly pry the rear of the floorplate up so that it can be pulled off the magazine.

Remove the spring and attached follower from the magazine shell. The spring will exit the shell easily, but the follower must be twisted and withdrawn, rear first. Do not remove the spring from the follower.

NO FURTHER DISASSEMBLY OF THE FIREARM IS REQUIRED.

13. MAINTENANCE

⚠ WARNING: ALWAYS UNLOAD YOUR FIREARM BEFORE CLEANING, LUBRICATION, DISASSEMBLY, OR REASSEMBLY.

⚠ WARNING: DO NOT APPLY LUBRICANT OR PRESERVATIVE TO YOUR AMMUNITION. DOING SO MAY CAUSE THE CARTRIDGE TO PARTIALLY MALFUNCTION, LEAVING THE BULLET LODGED IN THE BORE, CREATING A BORE OBSTRUCTION.

13.1 CLEANING SOLVENTS AND LUBRICANTS

The Military Services generally use a multipurpose chemical called CLP (cleaner, lubricant, and preservative) sold commercially as "Break Free." Although it is useful if nothing else is available, armament engineers prefer individual, specialized products. A combination of military RBC (rifle bore cleaner) and LSA (lubricant, semifluid, automatic weapons) is superior. High quality cleaning solvent like Hoppes No. 9 removes metal fouling from the bore excellently; and Teflon bearing lubricants, such as Bore Cote, are outstanding lubricants. For maximum reliability and service life, lubricate your rifle (especially the highly stressed bolt and bolt carrier assembly) generously with high quality firearms lubricants.

Under NO conditions should any lubricant containing graphite be used with your rifle. Graphite can encourage rapid corrosion to the aircraft-grade aluminum used in your rifle.

In addition to cleaning solvents and lubricants, the basic cleaning equipment you will need includes a cleaning rod, brass bore brush, chamber brush, toothbrush, patches, pipe cleaners, and the most important item: a lint-free cloth. ArmaLite®® recommends a pull-through cleaning cable for efficient, breech-to-muzzle cleaning.

13.2 UPPER RECEIVER AND BARREL ASSEMBLY

NOTE: Don't reverse the direction of the bore brush while it's in the bore.

1. Use cleaning solvent on the bore and chamber, the gas tube (U-9), the upper receiver and barrel assembly, locking lugs and all areas of powder fouling, corrosion, dirt or dust.

Use a cleaning rod, bore brush and cleaning solvent. Run the rod through the chamber and flash suppressor (U-18) (if applicable) several times.

⚠ WARNING: LEAD MAY BE PRESENT IN THE FOULING OF A DIRTY RIFLE. AVOID CONTACT WITH IT, AND CLEAN HANDS AFTERWARD TO AVOID INGESTING LEAD.

⚠ CAUTION: DON'T REVERSE THE DIRECTION OF THE BORE BRUSH WHILE IT'S IN THE BORE.

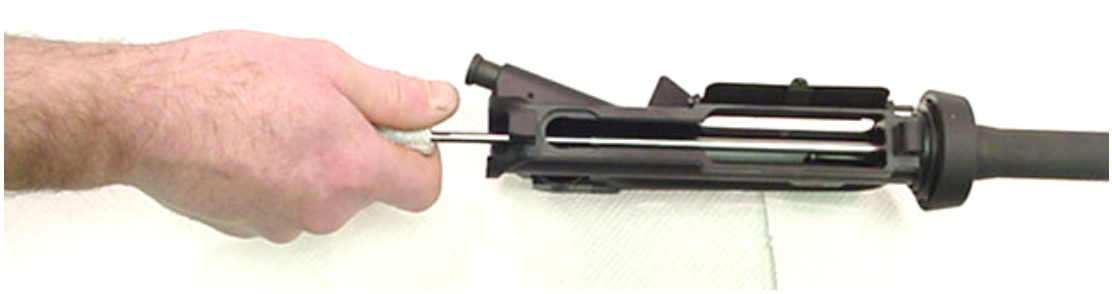

2. Install the chamber brush on the cleaning rod, dip it in cleaning solvent, and insert it into the chamber and locking lugs. Clean by pushing and twisting the cleaning rod.

3. Use a worn out bore brush to clean the outside surface of the protruding gas tube (U-9) (get the sides and bottom from the bottom of the upper receiver). This procedure ruins the brush.

NOTE: Gas tubes will discolor from heat. Do not try to remove this discoloration.

⚠ CAUTION: DO NOT TRY TO CLEAN THE INSIDE OF THE GAS TUBE. IT IS NOT NEEDED WITH GOOD QUALITY PROPELLANT, NOR IS IT EFFECTIVE WITH BAD PROPELLANT.

⚠ CAUTION: DO NOT BEND THE GAS TUBE. IF THE TUBE IS BENT, IT WILL SLOW OR BLOCK FORWARD MOVEMENT OF THE BOLT CARRIER ASSEMBLY.

4. Take the bore brush off the rod and install a swab holder and a swab. Apply cleaning solvent to the swab; then run it through the chamber and out the flash suppressor (if applicable). To remove carbon build up, let the solvent sit, then wipe clean. A bore brush may be used with care to remove heavy carbon buildup. Wipe the bore dry by running clean swabs all the way through from the chamber to the flash suppressor. REMEMBER, do not change directions in the bore.

5. Inspect the barrel, gas tube, and hand guards for cracks, bends, or breaks. Be sure the barrel has no obstructions.

6. Lightly lubricate the bore and chamber, outer surface of the barrel and front sight, and the surfaces under the handguards.

7. With a lubricated swab, run the rod from the receiver to the flash suppressor (if applicable). Do not over lubricate.

8. Lubricate the locking lugs.

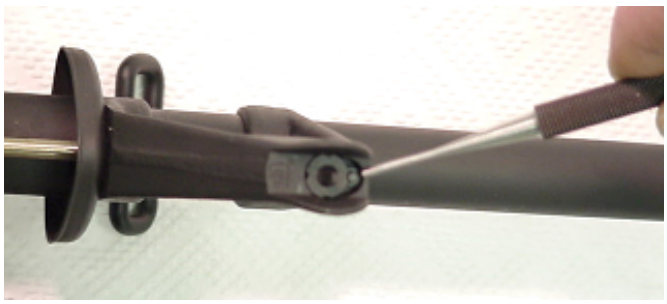

9. Drip lubricant on the front sight detent. Then depress the detent to work the lubricant in.

13.3 CHARGING HANDLE AND BOLT CARRIER ASSEMBLY

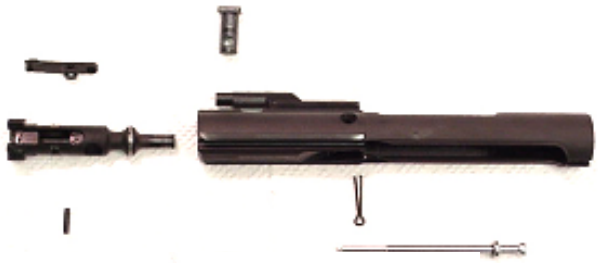

1. Clean all parts and outer surfaces of the bolt carrier assembly with a swab saturated with cleaning solvent.

2. Clean the bolt carrier key (BC-6) with a worn bore brush dipped in solvent and dry with a pipe cleaner.

3. Remove carbon deposits and dirt from the locking lugs with a bore brush dipped in solvent.
4. Clean the areas behind the bolt rings and under the lip if the extractor.

5. Press the ejector (B-10) in repeatedly to remove accumulated brass shavings from the ejector hole and assure the ejector moves freely. Lubricate it generously.

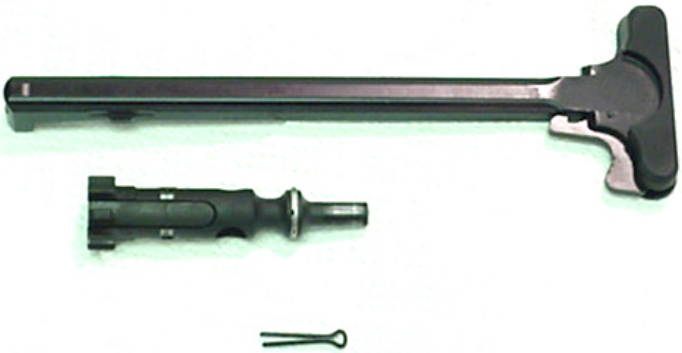

6. Inspect the charging handle for cracks, bends or breaks.

7. Inspect the bolt assembly for cracks or fractures, especially in the cam pin hole area.

⚠ WARNING: DO NOT INTERCHANGE BOLTS BETWEEN RIFLES.

8. Inspect the firing pin retaining pin for bends, breaks, or dents.

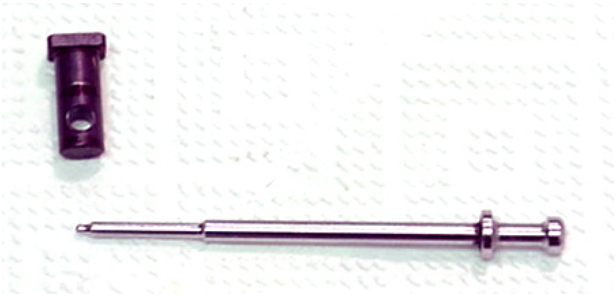

9. Inspect the bolt cam pin for cracks or chips.

10. Inspect the firing pin for bends, cracks, or a sharp, chipped, or blunted tip.

11. Lightly lubricate the firing pin and firing pin recess in the bolt assembly.

12. Generously lubricate the outside of the bolt cam pin and the firing pin retaining pin. Make certain to lubricate the bolt cam pin hole, bolt rings, and outside of the bolt.

13. Lightly lubricate the inner and outer surfaces of the bolt carrier. Generously lubricate the slide and the cam pin area of the bolt carrier.

14. Lightly lubricate the charging handle.

15. Dry the key (BC-6) of the bolt carrier assembly (U-3) with a pipe cleaner. Place one drop of lubricant inside the key.

NOTE: Carbon in the groove at the bottom of the gas cylinder in the carrier cannot accumulate enough to become a problem. Efforts to remove it cause more damage than leaving it. Avoid the instinct to over clean your rifle.

13.4 LOWER RECEIVER ASSEMBLY

⚠ CAUTION: DO NOT USE A WIRE BRUSH OR ANY TYPE OF ABRASIVE MATERIAL TO CLEAN ALUMINUM SURFACES

1. Wipe dirt from the trigger with a swab.

2. Use a swab and cleaning brush to clean powder fouling, corrosion, and dirt from the lower receiver.

3. Use a pipe cleaner to clean the buttstock screw vent hole.

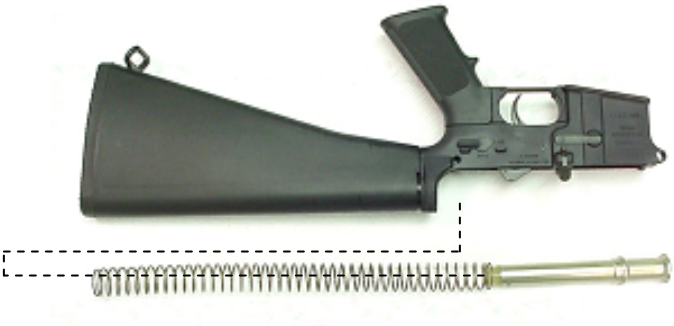

4. Clean the buffer, recoil spring, and inside lower receiver with a swab dipped in solvent.
5. Lightly lubricate the buffer and operating spring.

6. Examine the lower receiver assembly for a broken or bent trigger, buttstock, corroded or deformed lower receiver, cracked or damaged grip, and bent or damaged safety. Look at the inside parts for cracks, dents, or breaks.

7. Generously lubricate the takedown (L-23) and pivot pins (L-20) and the inside parts of the lower receiver assembly.

⚠ WARNING: ARMALITE'S NATIONAL MATCH TRIGGER ASSEMBLY ISN'T USER ADJUSTABLE. FOR SAFETY REASONS, IT IS INTENTIONALLY BUILT WITH A SMALL AMOUNT OF CREEP IN THE SECOND STAGE. AS IT BREAKS IN WITH USE (200 TO 500 ROUNDS), THE CREEP TENDS TO DECREASE TO AN ACCEPTABLE LEVEL. IF EXCESS CREEP REMAINS, THE TRIGGER CAN BE TUNED BY A GUNSMITH USING TECHNIQUES SIMILAR TO THOSE USED WITH THE M1 / M14 TRIGGER SYSTEM. ARMALITE TECHNICIANS WILL FINE-TUNE THE TRIGGERS FOR A NOMINAL SHOP FEE, PLUS SHIPPING.

14. REASSEMBLY

⚠ **WARNING: ALWAYS UNLOAD YOUR FIREARM BEFORE CLEANING, LUBRICATION, DISASSEMBLY, OR REASSEMBLY.**

14.1 LOWER RECEIVER ASSEMBLY

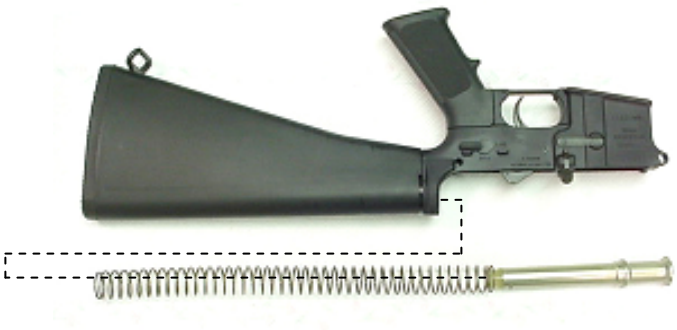

Insert operating spring and buffer.

14.2 CHARGING HANDLE AND BOLT CARRIER

NOTE: The extractor has a silicone plunger in the spring. Don't lose it.

1. If the spring comes loose, seat the large end of the spring in the extractor. Assure the reinforcement ring is around the spring.
2. Insert the extractor with spring assembly into the bolt.
3. Push extractor until the holes on the extractor and bolt are aligned and insert the extractor pin.

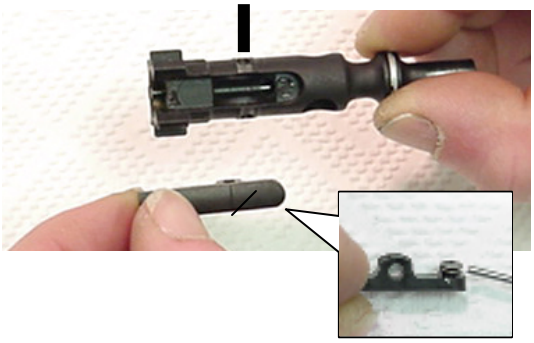

4. Stagger the gaps in the gas rings (B-1) to prevent gas loss.

5. Slide the bolt assembly into the bolt carrier ***only far enough to insert the cam pin***.

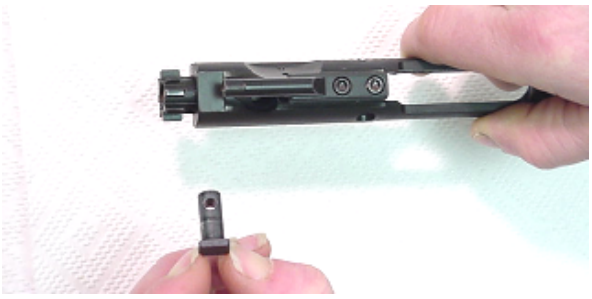

6. Insert the cam pin (BC-3) and give it a ¼ turn.

7. Drop the firing pin into its opening.

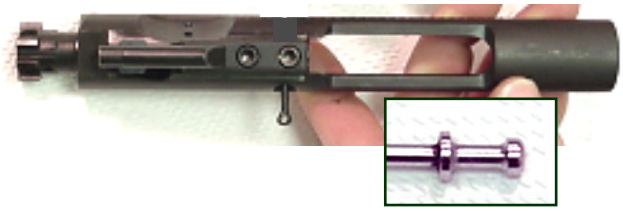

8. Pull the bolt assembly forward and insert the firing pin retaining pin in the area behind the large flange of the firing pin.

⚠ **CAUTION: DO NOT POUND OR FORCE THE FIRING PIN RETAINING PIN INTO POSITION; IT MAY BE DAMAGED.**

9. Turn the bolt carrier assembly up and try to shake out the firing pin. The firing pin must not fall out.

10. Place the charging handle into the upper receiver and engage the handle's lugs with the track in the receiver, then push the charging handle part way into the upper receiver.

11. Slide the bolt carrier assembly, bolt extended, into the upper receiver.

12. Push the charging handle assembly and bolt carrier assembly together into the upper receiver.

14.3 UPPER AND LOWER RECEIVERS

NOTE: The hammer must be in cocked position to join the receivers.

1. Join the upper and lower receivers.

2. Align the pivot pin holes with the pivot pin and push the pivot pin in.

⚠ **CAUTION: TO AVOID DAMAGE TO THE EJECTION PORT COVER, CLOSE THE EJECTION PORT COVER BEFORE THE RECEIVERS ARE JOINED.**

4. Close the upper and lower receivers.
Push in the takedown pin.

NOTE

Normal forging and manufacturing variations may result in slight overhang or play. This will not affect function or accuracy.

14.4 HANDGUARDS AND SLING – THE BUDDY SYSTEM

1. Place the weapon on its buttstock with one hand gripping the stock. Insert one handguard into the hand guard cap (U-11).
2. Have your buddy press down on the slip ring (U-8).
3. Install one handguard.
4. Repeat these steps to install the second handguard.

5. Attach the sling.

14.5 FUNCTIONAL CHECK

1. Remove the magazine and visually inspect the chamber to assure that it is empty. Install an empty magazine. Assure that it is caught solidly by the magazine catch.

2. Pull the charging handle to the rear and then manually return it forward. The bolt should remain to the rear against the bolt stop. Remove the magazine. Press in on the bolt stop (L-13). The bolt carrier assembly should be propelled forward by the operating spring.

3. Place the safety (L-24) on "SAFE". Squeeze the trigger (L-32). *The trigger should not fall.*

4. Place the safety (L-24) on "FIRE". Squeeze the trigger (L-32) and hold the trigger to the rear; *the hammer (L-28) should fall*. Pull the charging handle (U-2) to the rear and release it. Release the trigger. *You should hear a click as you release the trigger.* Squeeze again; *the hammer should fall*.

CALL ARMALITE®® AT (309) 944-6939 IF YOUR RIFLE FAILS THIS TEST.

15. TROUBLESHOOTING

PROBLEM	CHECK FOR	WHAT TO DO
WON'T FIRE	Selector lever on "SAFE"	Put it on "FIRE".
	Improper assembly of firing pin	Assemble correctly. NOTE: the retaining pin goes in back of large shoulder of firing pin.
	Oil or fouling in bolt	Clean with pipe cleaner.
	Defective ammunition	Remove and discard.
	Too much carbon on firing pin	Clean.
	Bolt not fully locked.	Extract cartridge, clean area.
BOLT WON'T LOCK	Dirty bolt	Clean.
	Burred or broken bolt	Contact ArmaLite®.
	Ejector stuck	Contact ArmaLite®.
	Dirt, corrosion, or carbon buildup in barrel locking lugs	Clean lugs.
WON'T EXTRACT	Broken extractor spring	Replace.
	Inner spring or reinforcement ring missing from extractor spring	Replace.
	Dirty, corroded, or reloaded ammunition	Remove and discard.
	Carbon in chamber	Clean chamber.
	Frozen or worn extractor	Remove and clean.
	Restricted buffer assembly	Remove and clean.
	Restricted movement of bolt carrier assembly.	Remove, clean and lubricate.

TROUBLESHOOTING (CONTINUED)

PROBLEM	CHECK FOR	WHAT TO DO
WON'T EXTRACT	Clogged gas tube	Replace.
	Short recoil	See below.
WON'T FEED	Dirty, corroded, or reloaded ammunition	Remove and discard.
	Dirty or defective magazine	Clean and lubricate or replace.
	Too many rounds in magazine	Remove excess rounds.
	Buffer assembly is restricted	Take out and clean buffer and spring.
	Magazine not fully seated	Adjust magazine catch: Press button on right side, and turn catch on left. Clockwise tightens.
	Short recoil	See below.
DOUBLE FEED	Defective magazine	Replace.
WON'T CHAMBER	Dirty corroded or defective ammunition.	Remove and discard.
	Ejector stuck	Clean and oil.
	Carbon in carrier key or chamber	Clean.
SHORT RECOIL	Rings worn or too loose.	Replace.
	Carbon or dirt in carrier key or on outside of gas tube	Clean.
	Q-tip/pipe cleaner stuck inside carrier key	Remove.

TROUBLESHOOTING (CONTINUED)

PROBLEM	CHECK FOR	WHAT TO DO
SHORT RECOIL	Loss of gas power	Check entire gas path
	Weak or reloaded ammunition	Replace with factory fresh ammunition.
	Dirty rifle	Clean.
	Improper lubrication	Lubricate generously.
BOLT FAILS TO LOCK OPEN AFTER LAST ROUND	Defective magazine	Replace.
	Dirty or corroded bolt catch	Clean or replace.
SELECTOR LEVER BINDS	Needs oil	Lubricate.
	Dirt or sand under trigger.	Clean.
BOLT CARRIER "HUNG UP"	Round jammed between bolt and charging handle and/or double feed	1. Remove magazine. 2. Push in on bottom of bolt catch. 3. Bang rifle butt on ground, bolt should shift to rear. 4. While bolt is held to rear, round should fall out through magazine well. NOTE: If this procedure fails, use a cleaning rod to push bolt fully to the rear through the ejection port.

16. WARRANTY, SERVICE, AND SUGGESTIONS

Specific warranty provisions for your ArmaLite® firearm are shown on the warranty card shipped with your new firearm. Be sure to complete your warranty card and return it to ArmaLite® immediately. The warranty will only be honored upon completion of the warranty form and its return to ArmaLite® within 30 days of the original customer's purchase date along with a copy of the dated sales receipt. If no warranty card is on file, all work will be billed at shop rates. Custom work will be billed at ArmaLite®'s shop rates, as will work on rifles submitted with no warranty problem existing. Shipping to and from ArmaLite® is the owner's responsibility.
You must have a Return Material Authorization (RMA) number from our service department in order to return a firearm for service. We will not accept a firearm without a RMA. Contact us as shown below. After you have your RMA number, assure that your firearm is completely unloaded. Then package your firearm securely and ship it to the below address. Include a letter explaining, in as much detail as possible, the nature of the problem or service needed.

⚠ **WARNING: MAKE ABSOLUTELY SURE THAT THE FIREARM IS UNLOADED!!! BELIEVE IT OR NOT, WE SOMETIMES GET FIREARMS BACK THAT ARE LOADED!!!**

⚠ **WARNING: NEVER SHIP LIVE AMMUNITION WITH ANY FIREARM THAT YOU ARE RETURNING TO ARMALITE® FOR SERVICE.**

⚠ **WARNING: IT IS THE OWNER'S RESPONSIBILITY TO ASSURE THAT ANY PARTS THAT ARE PURCHASED FROM ARMALITE® ARE CORRECTLY FITTED AND INSTALLED. IMPROPER FITTING OR INSTALLATION MAY RESULT IN INJURY, DEATH, OR DAMAGE/MALFUNCTION OF THE FIREARM.**

A copy of the owner's manual for any ArmaLite® firearm is available free in the Library on ArmaLite®'s website or may be obtained free in hard copy by contacting ArmaLite®.

Additional technical information can be found in Technical Notes in the Library section of ArmaLite®'s website.

To answer any questions you may have about the firearm, or to offer suggestions for improvements, please contact us at:

ArmaLite, Inc
P.O. Box 299
Geneseo, Illinois, 61254

Phone: 1-800-336-0184 or 309-944-6939
Fax: 309-944-6949
Email: info@ArmaLite.com

THE WIZ
2008

PATENTS AND TRADEMARKS

PATENTS AND TRADEMARKS: The M-15™ rifle is protected by U.S. Patents 5,911,173 and 6,044,748. "ArmaLite®", "M-15™", and other model variants are trademarks of ArmaLite®, Inc.